U PVC WINDOW PROFILE FOR 92MM SERIES SLIDING

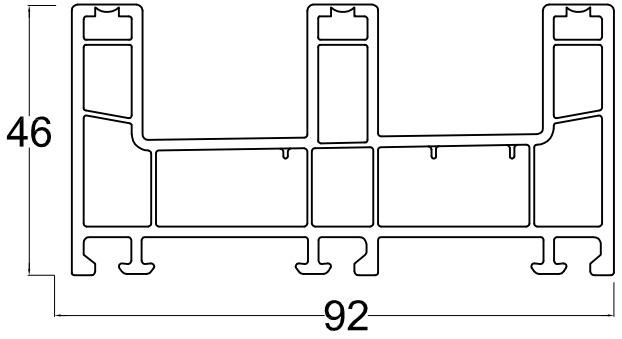

3-TRACK FRAME
KAS 4692

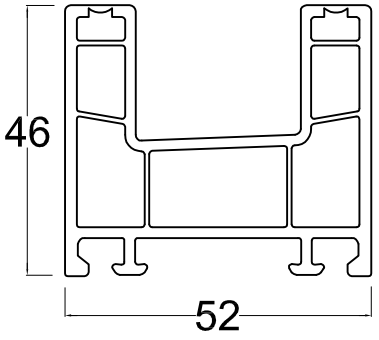

2-TRACK FRAME
KAS 4652

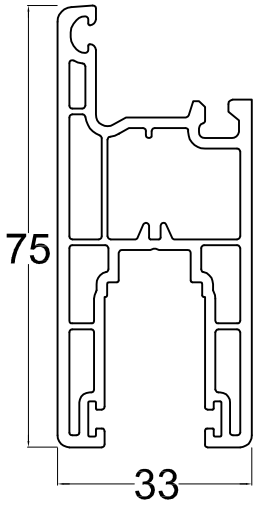

SLIDING DOOR SASH
KAS 3575

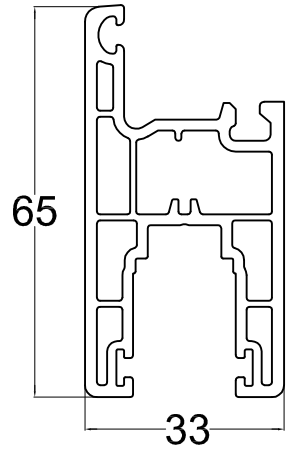

SLIDING WINDOW SASH
KAS 6533

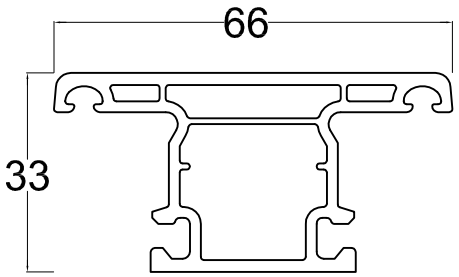

SLIDING MULLION
6633

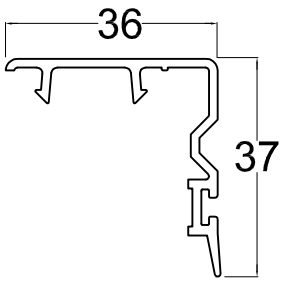

INTERLOCK
KAS 3637

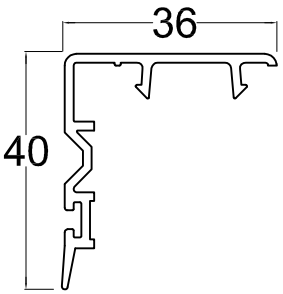

INTERLOCK
KAS 3640

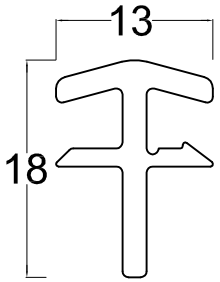

COUPLER
KAS 1318

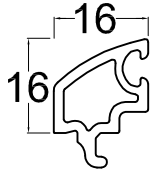

SINGLE BEAD
KAS 1616

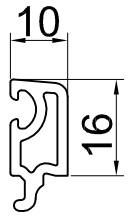

DOUBLE GLASS BEADING
KAS 1016