# U PVC WINDOW PROFILE FOR 60MM SERIES CASEMENT

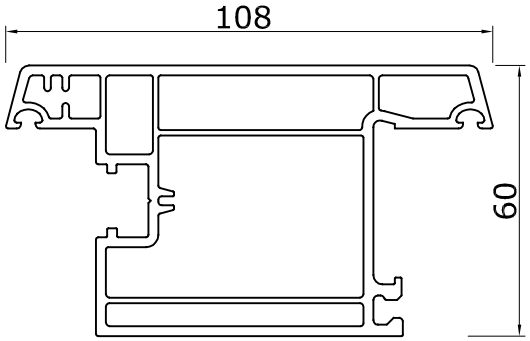


OUTWARD OPENING DOOR SASH
KAC 60108

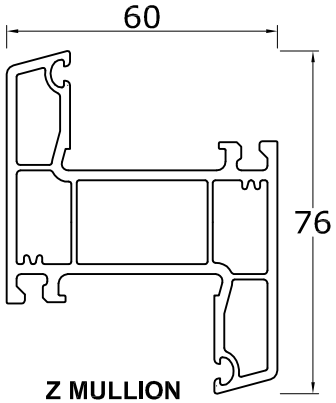


Z MULLION
KAC 6075

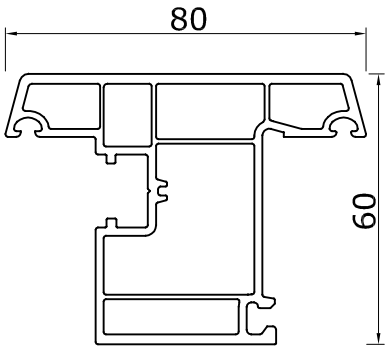


OPENABLE WINDOW SASH
KAC 6080

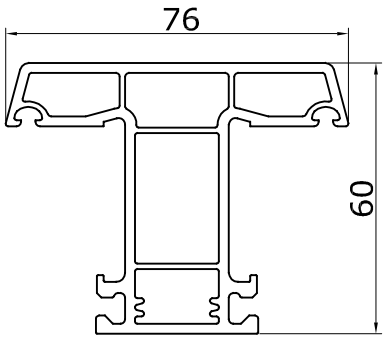


MULLION
KAC 6076

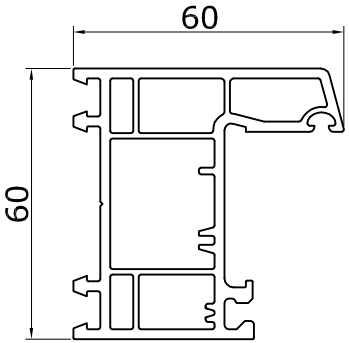


FRAME
KAC 6060

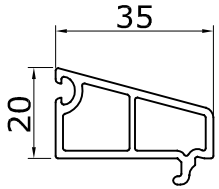


SINGLE GLASS
BEAD CASEMENT
KAC 2035

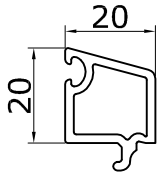


DOUBLE GLASS
BEAD CASEMENT
KAC 2021

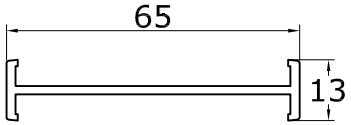


COUPLER
KAC 0260

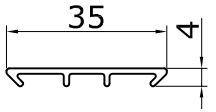


CUSHION
KAC 0436