U PVC WINDOW PROFILE FOR 42MM SERIES CASEMENT

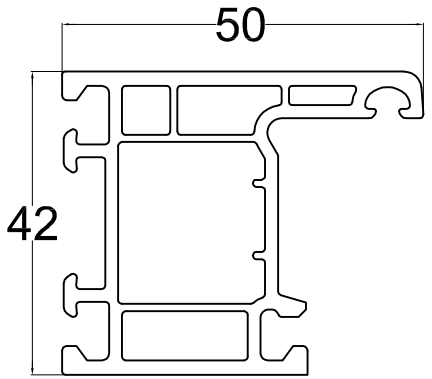

CASEMENT FRAME
KAC 5042

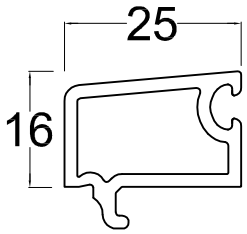

SINGLE CASEMENT BEAD
KAS 1625

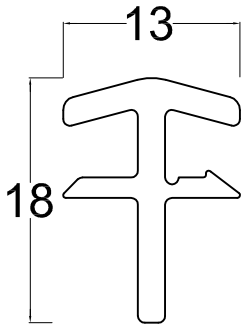

COUPLER
KAC 1318

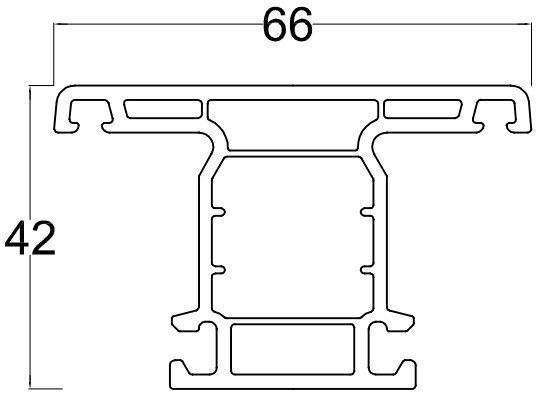

MULLION/SASH
KAC 6042

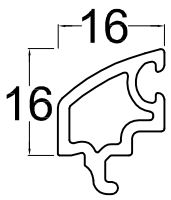

SINGLE BEAD
KAS 1616

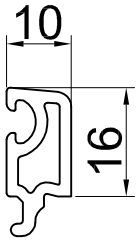

DOUBLE GLASS
BEADING
KAS 1610